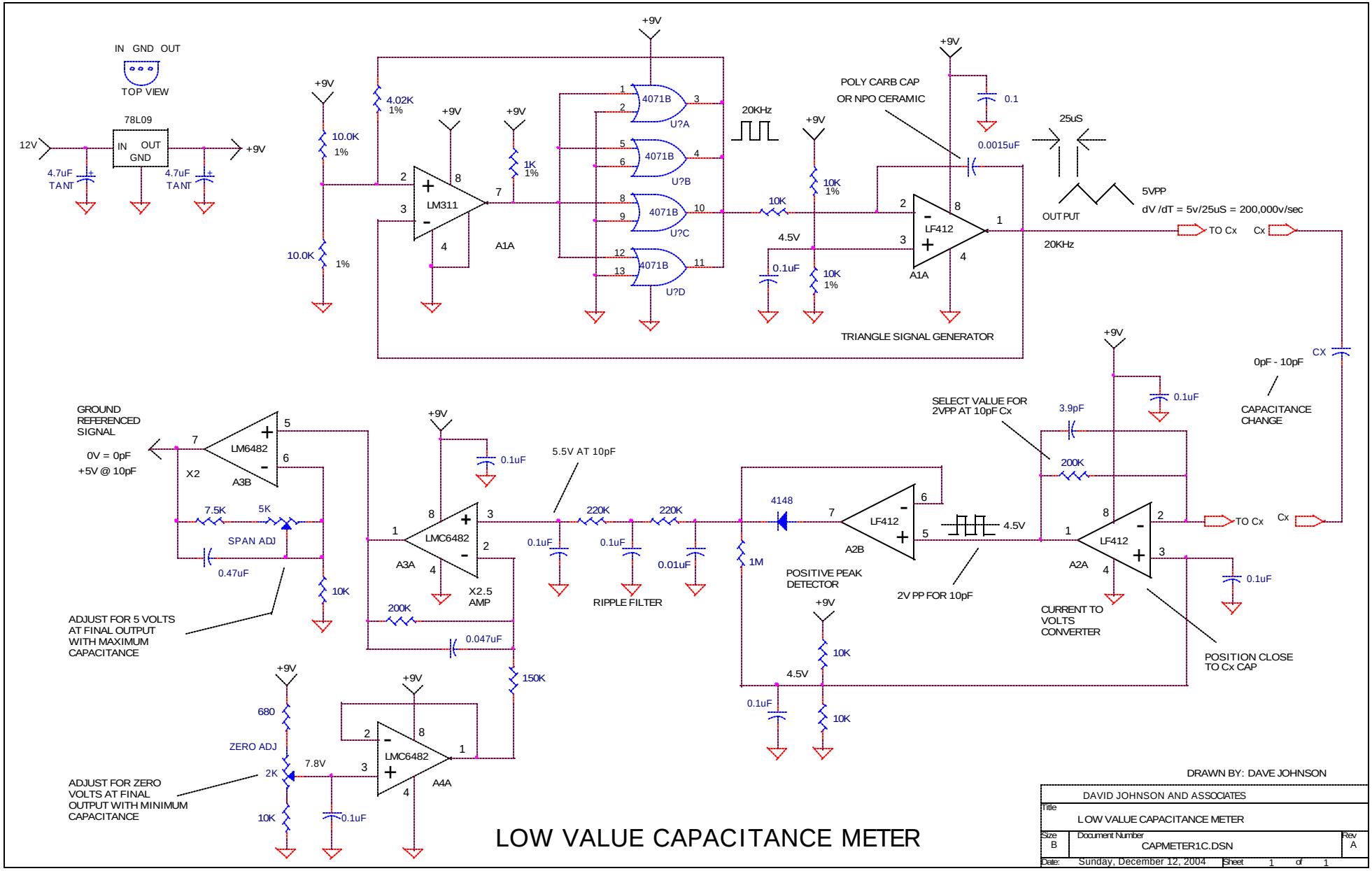
IN GND OUT
TOP VIEW
78L09
IN OUT
GND
12V
+9V
4.7uF TANT
4.7uF TANT
10.0K 1%
10.0K 1%
4.02K 1%
LM311
A1A
1K 1%
4071B
U?A
U?B
U?C
U?D
20KHz
10K
10K 1%
4.5V
0.1uF
10K 1%
POLY CARB CAP
OR NPO CERAMIC
0.1
0.0015uF
LF412
A1A
25uS
5VPP
OUTPUT
dV /dT = 5v/25uS = 200,000v/sec
20KHz
TO Cx
Cx
TRIANGLE SIGNAL GENERATOR
CX
0pF - 10pF
CAPACITANCE CHANGE
SELECT VALUE FOR 2VPP AT 10pF Cx
3.9pF
0.1uF
200K
LF412
A2A
TO Cx
Cx
0.1uF
CURRENT TO VOLTS CONVERTER
POSITION CLOSE TO Cx CAP
GROUND REFERENCED SIGNAL
0V = 0pF
+5V @ 10pF
LM6482
A3B
X2
7.5K
5K
SPAN ADJ
0.47uF
10K
ADJUST FOR 5 VOLTS AT FINAL OUTPUT WITH MAXIMUM CAPACITANCE
LMC6482
A3A
X2.5 AMP
0.1uF
5.5V AT 10pF
220K
220K
0.1uF
0.1uF
0.01uF
RIPPLE FILTER
1M
4148
LF412
A2B
4.5V
POSITIVE PEAK DETECTOR
2V PP FOR 10pF
200K
0.047uF
150K
10K
4.5V
0.1uF
10K
680
ZERO ADJ
2K
7.8V
10K
0.1uF
LMC6482
A4A
ADJUST FOR ZERO VOLTS AT FINAL OUTPUT WITH MINIMUM CAPACITANCE
LOW VALUE CAPACITANCE METER
DRAWN BY: DAVE JOHNSON
DAVID JOHNSON AND ASSOCIATES
Title
LOW VALUE CAPACITANCE METER
Size B
Document Number
CAPMETER1C.DSN
Rev A
Date: Sunday, December 12, 2004
Sheet 1 of 1