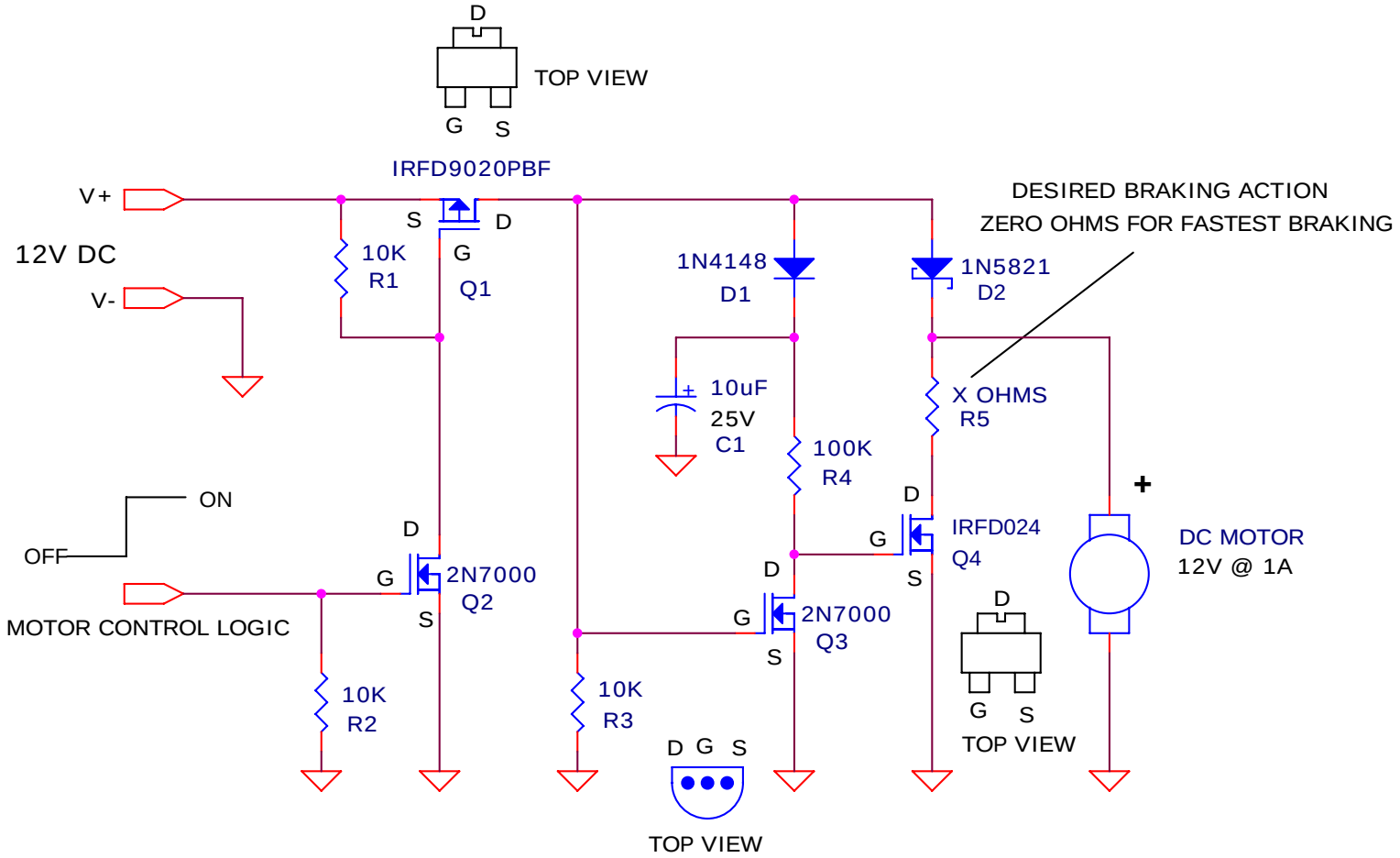

DC MOTOR DRIVE WITH AUTOMATIC BRAKE

LOGIC CONTROLLED

DESIGNED BY DAVE JOHNSON
DISCOVERCIRCUITS.COM

ALL RIGHTS RESERVED

DRAWN BY: DAVE JOHNSON

Title	DC MOTOR DRIVE WITH AUTOMATIC BRAKE	
Size A	Document Number MOTORWBRAKE2.DSN	Rev A
Date: Thursday, February 18, 2010	Sheet 1 of 1	