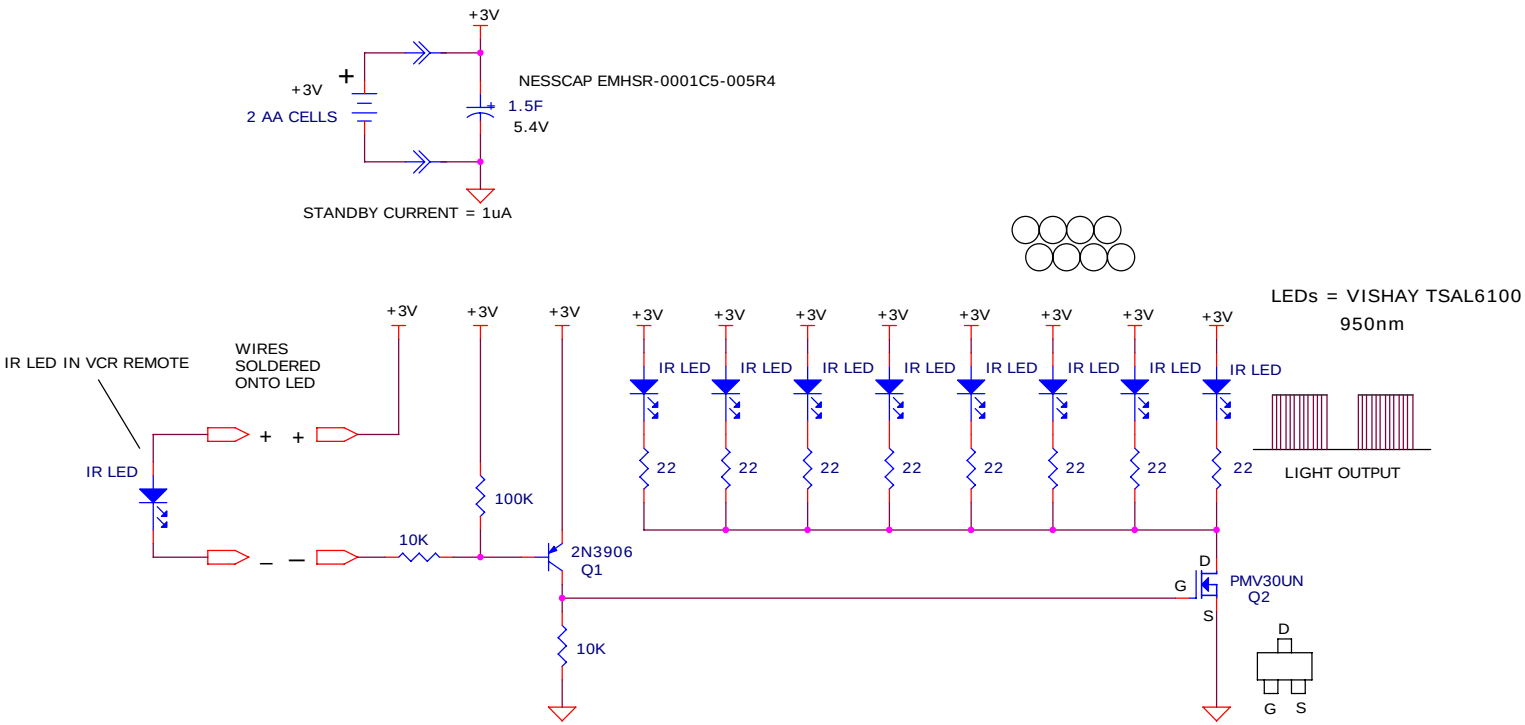


# TV-VCR REMOTE REPEATER

DESIGNED BY DAVE JOHNSON
DISCOVERCIRCUITS.COM
ALL RIGHTS RESERVED

DRAWN BY: DAVE JOHNSON

| | | |
|---|---|---|
| TV-VCR REMOTE REPEATER<br>HIGH POWER LED DRIVER | | |
| Size<br>B | Document Number<br>VCRREMOTEBOOST3.DSN | Rev<br>A |
| Date: Monday, December 14, 2009 | Sheet 1 of 1 | |