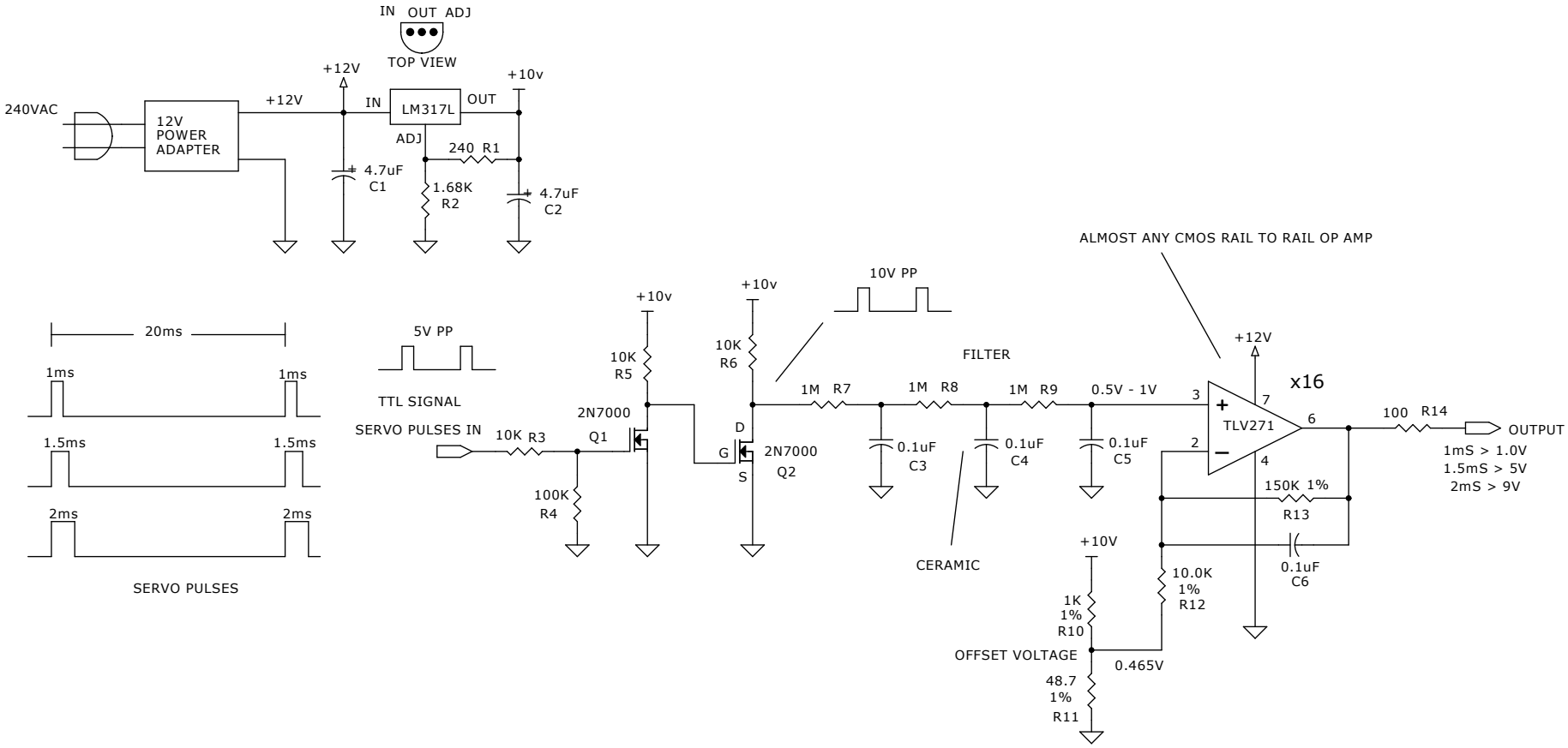

DESIGNED BY DAVE JOHNSON
DISCOVERCIRCUITS.COM
ALL RIGHTS RESERVED

DRAWN BY: DAVE JOHNSON

Title	SERVO PULSES TO VOLTAGE CONVERTER	
Size B	Document Number SERVO CONVERTER.DSN	Rev A
Date: Sunday, October 07, 2012	Sheet 1 of 1	