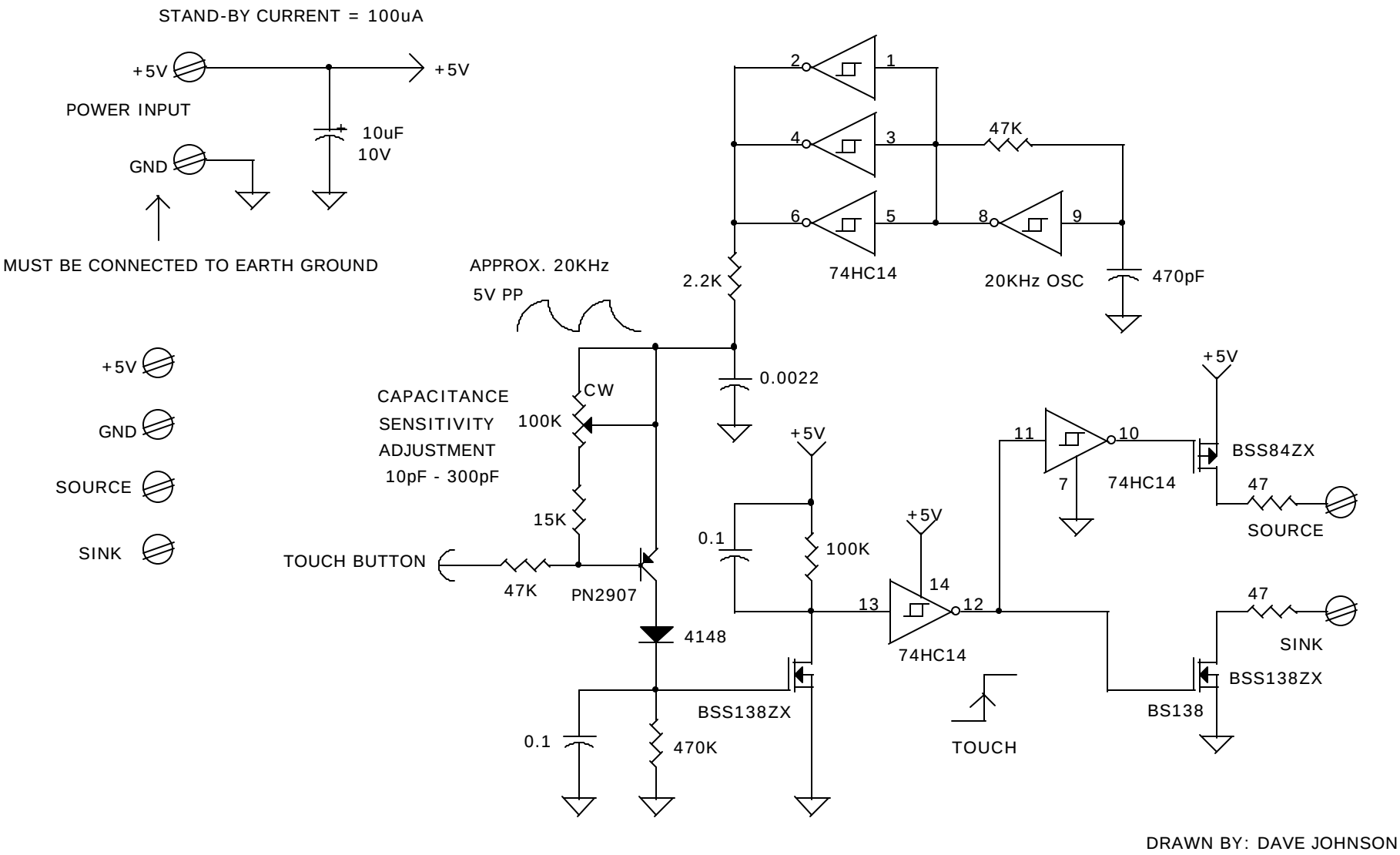


DRAWN BY: DAVE JOHNSON

# TOUCH ACTIVATE SWITCH

## SELF-EXCITED, 5V SUPPLY, MOMENTARY OPERATION

FARADAY SWITCHES
TOUCH ACTIVATED SWITCH
MOMENTARY OPERATION
5V SUPPLY NO/NC TTL OUTPUT

| Size | Document Number | Rev |
|---|---|---|
| A | 5VMOM1.DSN | A |

Date: Saturday, July 08, 2000 Sheet 0 of 0