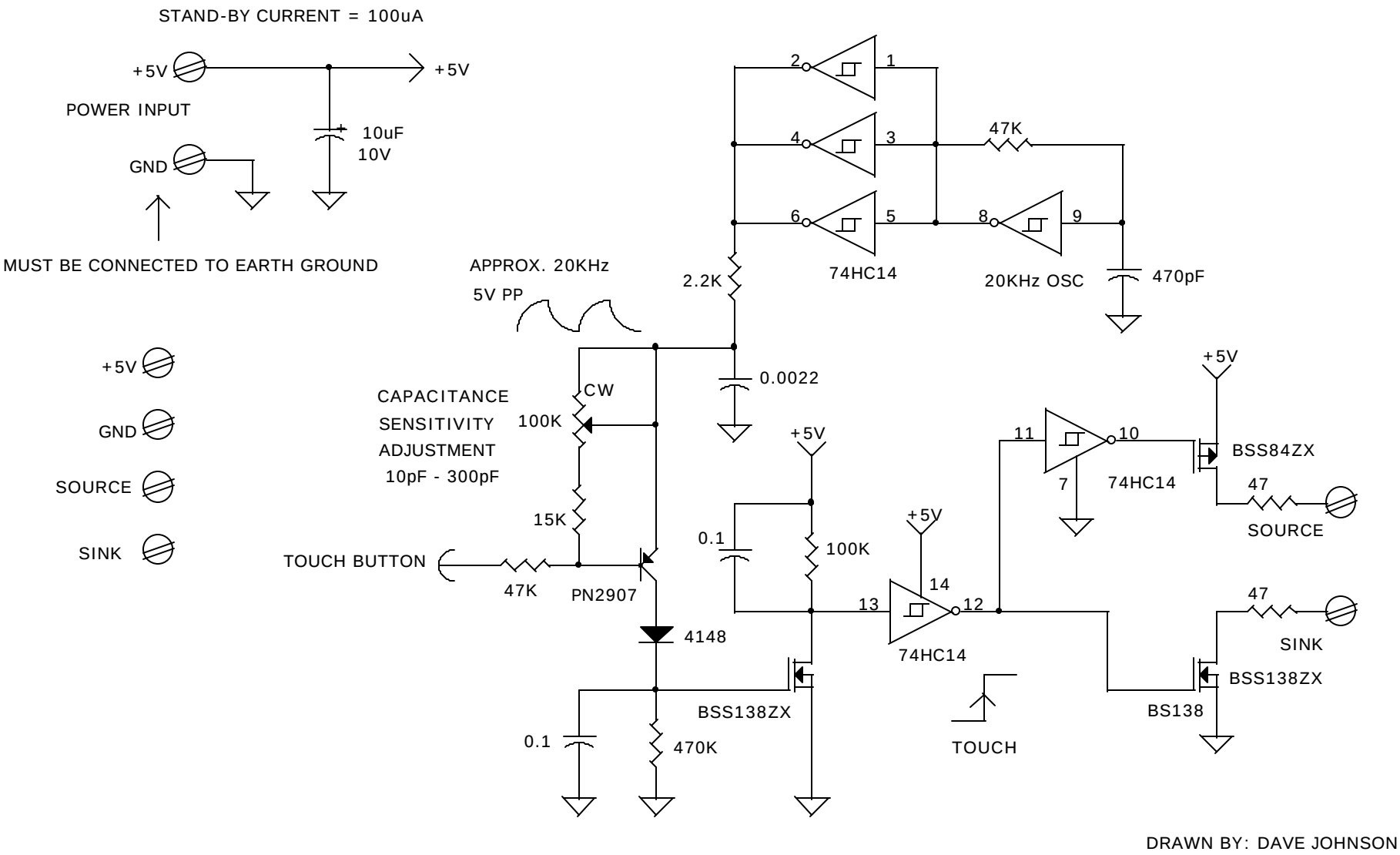

DRAWN BY: DAVE JOHNSON

TOUCH ACTIVATE SWITCH

SELF-EXCITED, 5V SUPPLY, MOMENTARY OPERATION

FARADAY SWITCHES
TOUCH ACTIVATED SWITCH
MOMENTARY OPERATION
5V SUPPLY NO/NC TTL OUTPUT

Size	Document Number	Rev
A	5VMOM1.DSN	A

Date: Saturday, July 08, 2000 Sheet 0 of 0