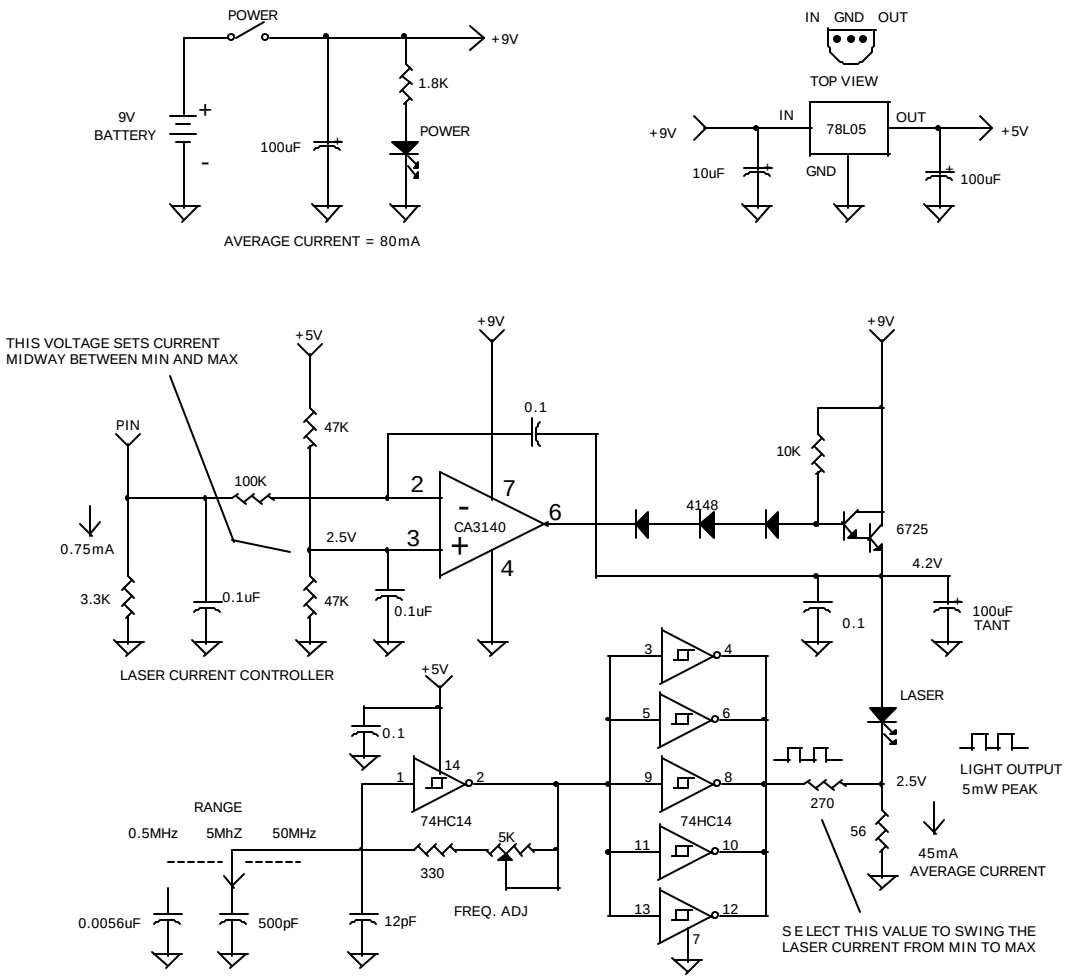

LASING THRESHOLD = 40mA

MAX OPERATING CURRENT = 50mA

VOLTAGE DROP = 1.7V

PIN OUTPUT = 1mA AT 50mA LASER CURRENT

DRAWN BY: DAVE JOHNSON

GaAlAs LASER DIODE TEST CIRCUIT

DAVID JOHNSON AND ASSOCIATES		
CW LASER DRIVER TEST CIRCUIT		
Size B	Document Number CWLASER.DSN	Rev A
Date: Saturday, March 20, 1999	Sheet 1 of 1	