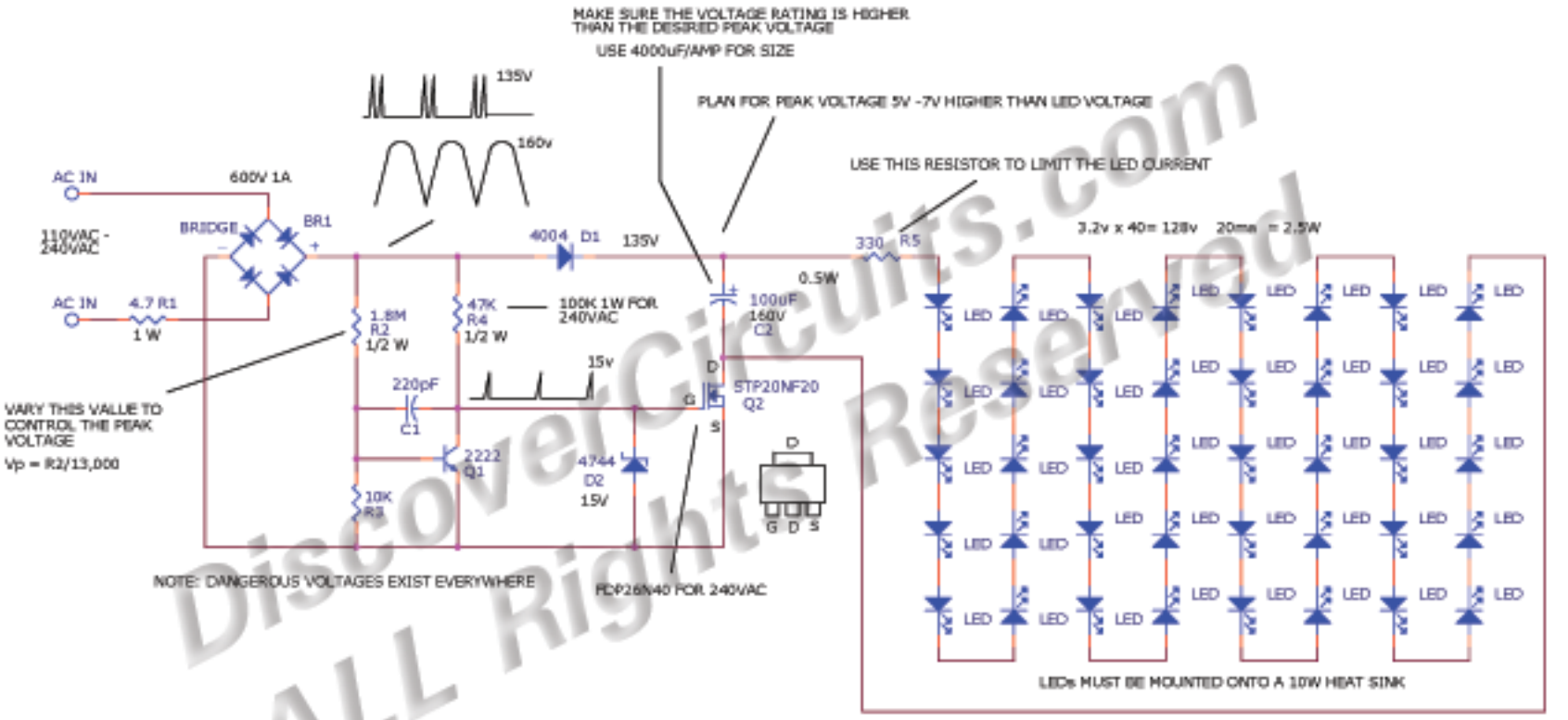

DiscoverCircuits.com
ALL Rights Reserved

AC LINE POWERED 40 WHITE LED SERIES STRING DRIVER

DESIGNED BY DAVE JOHNSON
DISCOVERCIRCUITS.COM
ALL RIGHTS RESERVED

DRAWN BY: DAVE JOHNSON

Title: Line Powered 40 LED Driver		
Size: B	Document Number: OffLine40LEDDriver1.dsn	Rev: A
Date: Saturday, February 27, 2010	Sheet 1 of 1	